- INTEGRITY
- PRAGMATISM
- INNOVATION
- EFFICIENCY



Address: No. 10, Keda West Road, Yicheng Economic Development Zone
, Zaozhuang City, Shandong Province
Website: en.huisonbattery.com
Postcode: 277300
Tel: 0632-7526625
Email: market09@huisonbattery.com

山东旭尊电子科技有限公司
Shandong Huison Electronics Technology Co.,ltd

HUISON 旭尊电子
Huison Electronics Technology

Company structure

Organization

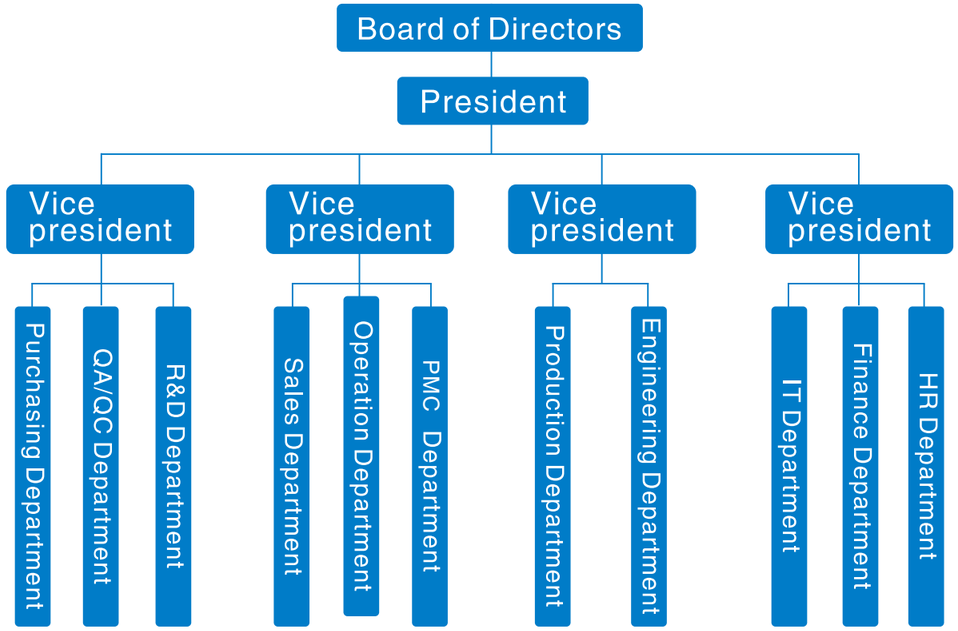

Company image








CATALOGUE

01 Company introduction 01/02

02 Prismatic, Cylindrical Battery series 03/04

03 Energy Storage Lithium Battery series 05/06

04 SmartSeries Power 07/8

05 Energy storage battery series 09/10
industrial energy storage
1MWH energy storage system solution

06 Energy Storage Module Series 11

07 Power Lithium Battery Series 12

08 Lead–acid Replacement Battery Series 13/14

09 Qualifications honors and partners 15/16

旭尊电子 HUISON
Huison Electronics Technology
COMPANY PROFILE

山东旭尊电子科技有限公司
Shandong Huison Electronics Technology Co.,Ltd

Shandong huison Electronic Technology Co., Ltd., as a high–tech enterprise of lithium battery in China,mainly engaged in the R&D, manufacturing, Sales and Service of Lithium–ion battery. Products Widely used in intelligent manufacturing, Residential storage, Industrial and Commercial energy storage, Portable Power Station, 5G batteries, Power tools, and other fields.

Our company manages in strict accordance with ISO9001 and ISO14001 international standards, and passed the UL1973,ROHS, REACH, UN38.3.MSDS, CE, CB, BIS, IEC62133 certification. The founder of Huison and its team have more than ten years of experience in the lithium battery industry, and continue to strive to build a benchmark enterprise of lithium batteries.

High starting point, high recognition

Huison was established in June 2012, customers are located in Domestic and foreign, and technical support facility all over the world

10+ years of Lithium battery experience

Huison's Management, Technology, Quality and Production teams all have more than 10 years of experience in lithium battery industry.

Focus on R&D investment

Committed to product and technological innovation, Huison Electronics has strong technical and R&D capabilities

Strong production capacity

Equipped with advanced automatic assembly line, Testing equipment, full monitoring intelligent aging equipment

Perfect company and product certification

National high–tech enterprise,
National Science and Technology SMEs
More product patents
CE, UL1973, ROHS,
UN38.3,IEC62133,REACH certificate

Prismatic Lithium Battery Series

Huison Prismatic Lithium batteries are cells that are wrapped in aluminum or steel, primarily for added stability, which brings several key advantages.

Huison Prismatic batteries are also commonly used in more scenarios, such as energy storage systems, electric forklifts, logistics vehicles, etc.

Features

- High energy density
- Stable charge and discharge performance
- High voltage platform
- High energy density
- Long cycle life

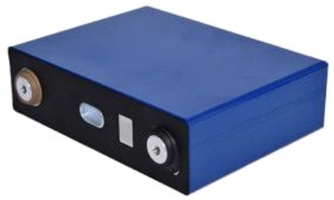



Application

Material system	Model	Rated voltage	Rated Capacity	Max charge rate (1C)	Max discharge rate(1c)	Internal resistance	Weight	Cycle
Material system	IFP23140160-50Ah	3.2v	50	1	2	≤0.65	1.15	≥2000
	IFP480173115-100Ah		100	1	1	≤0.45	2.05	≥4000
	IFP54173113-105Ah		105	1	1	≤0.4	2.17	≥6000
	IFPNAH3L0-200Ah		200	1	1	≤0.4	4	≥6000
	IFP54173200-206Ah		206	1	1	≤0.3	4	≥6000
	IFPCLH3L0-280Ah		277	1	1	≤0.4	15.6	≥6000

Cylindrical Battery Series

Huison Electronics makes the battery size 18650,26650,26700,32700 ,with full series products, widely used for energy storage, power tools, lighting products.

Features

- High energy density and low Self-discharge rate
- Stable performance
- High voltage platform
- Suitable for various Shapes in series and parallel
- Fast charging
- Environmentally friendly



Application

Material	Model	Rated voltage	Rated Capacity	Max charge current (A)	Max discharge current (A)	Internal resistance	Peak current	Weight
LiFePO4	IFR18650-1600mAh-3.2V	3.2v	1600	1.6	4.8	≤40	15A ≤5s	40
	IFR18650-1800mAh-3.2V		1800	1.8	5.4	≤40	10A ≤5s	40
	IFR26650-3200mAh-3.2V		3200	3.2	9.6	≤0.4	15A ≤5s	84
	IFR26650-3400mAh-3.2V		3400	3.4	10.2	≤30	15A ≤5s	84
	IFR26650-3600mAh-3.2V		3600	3.6	10.8	≤30	20A ≤5s	85
	IFR26650-3800mAh-3.2V		3800	3.8	11.4	≤30	20A ≤5s	87
	IFR26700-4000mAh-3.2V		4000	2	12	≤20	20A ≤5s	93
	IFR32700-6000mAh-3.2V		6000	3	18	≤25	30A ≤5s	140
NCM	INR18650-2200mAh-3.6V	3.6v	2200	2.2	4.4	≤35	11A ≤5s	48
	INR18650-2500mAh-3.6V		2500	1.25	5	≤35	7A ≤5s	48
	INR18650-2600mAh-3.6V		2600	2.6	7.8	≤35	13A ≤5s	48
	INR18650-2900mAh-3.6V		2900	2.9	8.7	≤35	14A ≤5s	48
	INR18650-3500mAh-3.6V		3500	3.5	10.5	≤35	34A ≤5s	48
	INR26650-5000mAh-3.6V		5000	5	10	≤30	15A ≤5s	93

Energy Storage Battery Serie

Huison Lithium ion battery system has the remarkable advantages of high specific energy, long cycle life and environmental friendliness . It has become the main supporting power supply of various advanced portable electronic products.





Features

Home Energy Storage Lithium Battery Module

- Modular design, Standard RU casing
- Can be paralleled meet different power needs
- Support RS485, CANBUS, RS232, WiFi, Bluetooth, mobile App
- Compatible with industry standard inverters and chargers
- Simple and fashionable design
- Built–in Smart BMS
- Built–in Inverter

Application



Energy Storage Battery Serie

General overview of Huison Lithium battery , inverter and the PV solar system.
System combinations

Powastone Home Storage series overview				
Battery Capacity	5kwh	10kwh	15kwh	20kwh
AC inverter power	3kW,5kW,6kW,8kW,12kW			
PV power	From 3 kWp to 7 kWp			

Battery data sheet

The Powastone home storage system offers various battery capacities.

Powastone Battery data sheet				
Model	PS-5K	PS-10K	PS-15K	PS-20K
Battery Chemistry	LiFePO4 (Lithium iron phosphate battery)			
Modules number	1	2	3	4
Nominal capacity(Ah)	100	200	300	400
DC battery voltage range	40 ～ 57.6			
Nominal Voltage(V)	51.2			
Max charging current(A)	100	100	100	100
Depth of Discharge	100% 25℃			
Certificate	CE,MSDS, UN38.3 for pack;UL,IEC62133,IEC62619 for cell			
Dimension(mm)	650*460*465	650*460*645	650*460*825	650*460*1005
Weight(Kg)	75	115	155	195
Compatible inverter	SMA, Vitron, Growatt, Sol-Ark,Sofar,Deye,Goodwe,Must,Solax,etc			
Comm Interface	RS485,RS232,WiFi, App			
IP Rating	IP55, indoor and outdoor			
Balance	Active(3A) and passive(100mA)			
Anti-theft	Gyroscope			
Warranty	10 years [1]			
Storage temperature℃	-10 -40			
Working temperature℃	Charge:0-45; Discharge:-20- 55			
Humidity	5 % to 95 % Relative Humidity (Non condensing)			
Acoustic noise	35 dB (indoor application)			
Cooling	Natural			

[1], Conditions apply,refer to Huison Warranty Letter,full cycle per day i.e. one Charge/Discharge,

Smart Power Series

5G Telecom Lithium battery

Huison Smart Telecom Li-ion Battery is composed of prismatic LFP cells, intelligent BMS, and bidirectional DC converter (BDC) . The product features active control of the charge and discharge voltages to solve the bias current and circulating current issue inside battery packs when connected in parallel. Moreover, this product can be used for smart peak shifting and off-peak power consumption to save the initial investment of the product and thus enhance the income on investment.

Features

- Support for mixed use of lithium and lead–acid batteries
- Support for parallel connection of new and old lithium batteries
- Support for high current charging and discharging
- Extended battery service life
- Support for consistent–voltage long–distance power supply
- Integrated with BDC allowing for active cycle control
- Standard rack–mounted design (3U size)
- Support for remote monitoring

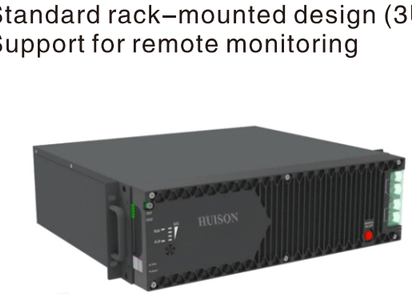



Application











Smart lithium battery energy storage system

Specification

Model	Smart 48V100	Smart 51.2V100
Chemistry	LFP	LFP
Rated voltage(v)	48 (15S)	51.2(16S)
Rated capacity(v)	100	100
Energy (Wh)	4800	5120
Discharge voltage(v)	56.4	56.4
Discharge voltage range(v)	40–58 (consistant voltage)	40–58 (consistant voltage)
Output Power(w)	4800	4800
Max working current(A)	100	100
Max cont. discharge current(A)	100	100
Discharge end voltage(v)	40	43.2
Cycle time	4000 (25℃, 0.5C, 80%DODM 80% EOL)	
Balance	Passive balancing (100 mA)	
Weight(kg)	~46	~49
Size(L*W*H)	442*400*133442*400*133	
Water proof grade	Ip20	
Communication	RS485*1, CAN *1, and dry contact*2	
Parallel number	Up to 32 packs (CAN)/16 packs (RS485)	
Temperature(℃)		Charge:0–45
		Discharge:–20–45
storage temperature (℃)	0 to 40	
Humidity	5% –95% RH non-condensing	
Cooling	Natural	
Protection	Over–heat, over–current, short–circuit, over–charging, over-discharging, etc.	
Working mode	Default mode, main bus voltage aligning mode, constant voltage discharging mode, peaking-shaving mode, peak-shifting mode, etc.	
Optional	Anti-theft gyroscope	

Industrial and Commercial ESS

The Industry and Commerce Energy Storage made by Huison Electronics with Integrated Construction, using All in one Cabinet, Energy can reach over MW level, including Battery System + BMS, PCS, EMS, transformer, Connection cable, Busbar, Lightning , Grounding System, Monitoring and Alarm system; modular Design. Flexible System Voltage and Capacity.

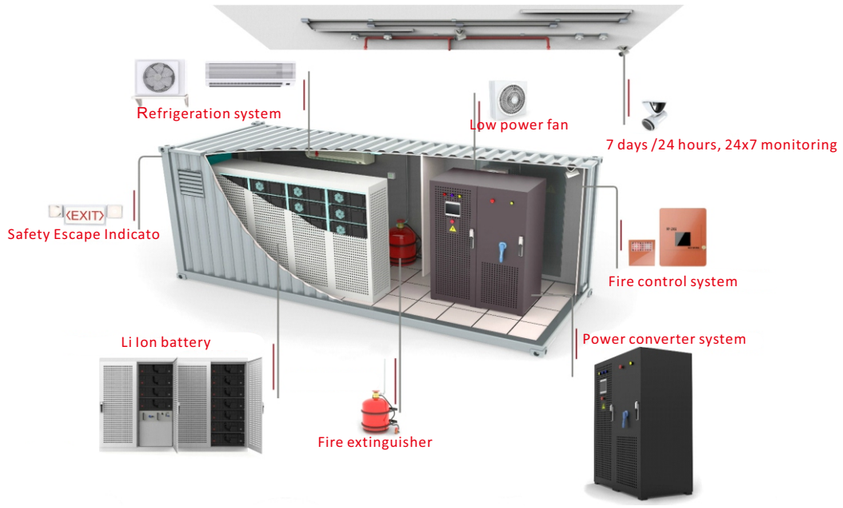

Topology of ESS

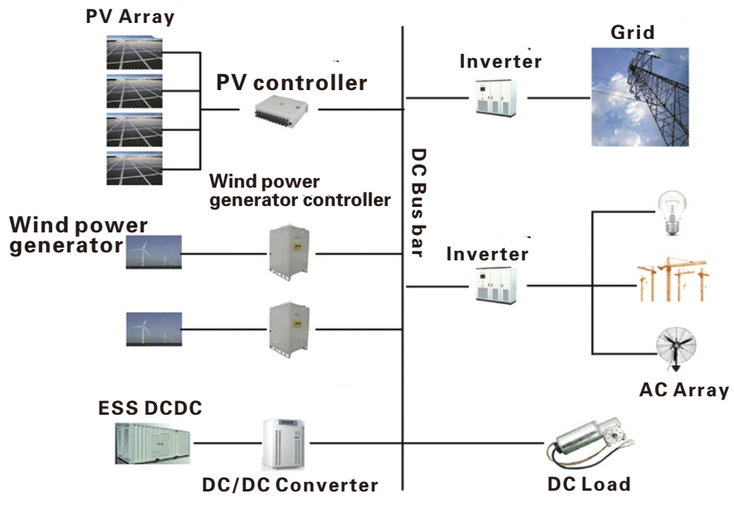

1mwhWind power generator

Name	Parameter
System model	5*1P238S–280Ah
Max charging rate	≤0.55C
Rated cycle rate	≤0.5C
Max discharge rate	≤0.55C
Serial and parallel number	5*1P238S
Capacity in parallel	5*280Ah
Rated energy	1.066MWh
Rated voltage	761.6V
Voltage range	642.6–856.8V
Temperature	Discharge:–20℃–55℃； Charge:0℃–55℃
Container size	7660*2800*2896mm(± 10)
Weight	〈30 tons

Application



Energy storage system solution

Huison 48V BMS solution is mainly used for 5G and backup power supply of Lithium battery cells,Home storage, Industrial and Commercial energy storage, etc, compatible with Li ion and LiFePO4. It provides voltage monitoring and active equalization protection during cycling,realizes parameter configuration and real-time data communication through RS485/RS232/Can Bus.

Features

- Support parallel using, the address can be set automatically;
- More than 200A charge and discharge current ;
- Multi channels acquisition function, acquisition range ± 200A;
- Up to 10A active equalization function, with rs485/rs232/can communication, supporting mainstream inverter protocol.;
- Support WiFi, Bluetooth, mobile app, LCD display and real-time monitoring
- Support cloud monitoring and local data storage.

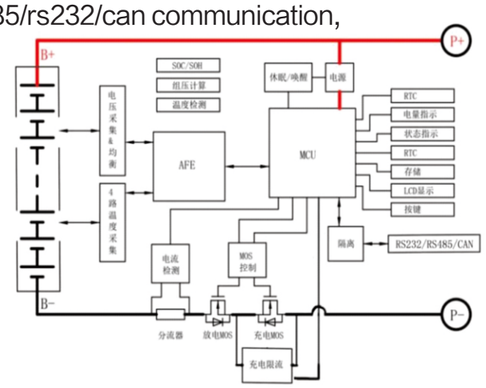

Product Parameter

Index	Item	Parameter
	Voltage range	power supply:30–60Vdc,
Power supply	Power Dissipation	⩽2W ; normal working current ⩽30mA,sleep mode⩽100μA
Working environment	Operating	–20℃–65℃
	Storage	–20℃~75℃
	Humidity	10% ~ 85%RH
	Pressure	80 ~ 110kPa
Acquisition accuracy	Cell	≤10mV,Sampling resolution:1mV
Temperature detection	Temperature	⩽2℃
SOC estimation		⩽5%

Power Lithium Battery

Huison power lithium battery series are widely used in various indoor and outdoor power vehicles, such as Forklift, AGV, Cleaning vehicle, Robot ,and other industries.

Features

- Support fast charging
- Built in intelligent BMS
- Extra long cycle and warranty time
- Quick plug–in design
- Maintenance free, Lower TOC
- Customized design

Product Parameter

Product	Electric forklift	AGVvehicle	logistics vehicle	Golf cart
Battery model	51.2V 195AH	51.2V 170AH	51.2V 100AH	51.2V 120AH
Nominal voltage	51.2V	51.2V	51.2V	51.2V
Rated capacity	194.4AH	169.2AH	100.8AH	120AH
Communication	CAN	RS485	CAN	CAN
Energy	9953WH	8663WH	5160WH	6144WH
Size	660x400x410mm	645x365x275mm	558x473x292mm	900x350x200mm
Charge voltage	57.6±0.15V	57.6±0.15V	57.6±0.15V	57.6±0.15V
Dischargeend voltage	40V	40V	40V	40V
Charge current	⩽100A	⩽40A	⩽40A	⩽24A
Discharge current	200A	80A	100A	60A
Protection	Overcharge, Overdischarge, Temperature, Balance, Communication			

Application






Lead–acid replacement battery

The lead-acid replacement battery produced by Shandong Huison Electronic Technology Co., Ltd. It has the advantages of high consistency, high energy ratio, light weight, small volume, high cycle life, high safety, high voltage consistency, etc., and it is widely used in various fields

Features

- Long design life
- Quick installation
- Continuously stable power supply
- Built–in smart BMS,high safety
- Visual monitoring

Product models

Model	Rated Voltage(V)	Capacity (Ah)	Maximum working curtent	Dimension			Weight(Kg)
				L	W	H	
HU12–7.5	12.8	7.5	7.5	90	70	100	0. 67
HU12–12	12.8	12	12	51	99	95	1. 7
HU12–18	12.8	18	18	181	76	166	2. 0
HU12–22	12.8	22	22	181	76	166	2. 8
HU12–30	12.8	30	30	175	175	113	4. 2
HU12–50	12.8	50	50	258	132	200	7. 3
HU12–60	12.8	60	60	250	160	175	7. 8
HU12–75	12.8	75	75	260	167	212	10
HU12100	12.8	100	100	328	172	212	13. 2
HU12–150	12.8	150	150	485	172	240	20
HU12–300	12.8	300	300	523	235	222	29
HU24-50	25.6	50	50	328	172	212	13. 2
HU24–100	25.6	100	100	523	235	222	26
HU-24V150	25.6	150	150	523	235	222	29
HU48-25	51.2	25.6	25.6	328	172	212	13. 2

Application






Portable Power Station



HPS150 HPS600 HPS300 HPS200 HPS150

Product Details





Product Parameter

Mode	HPS150	HPS300	HPS600	HPS1200
Capacity	173Wh/48Ah	288Wh/80Ah	576Wh/160Ah	1080Wh/300Ah
Chemistry	Lithium battery			
AC output powe	2000W	300W	6000W	1200W
AC output voltage	110–220V/50–60Hz			
DC input	5*20V/5A			10–48V/6A（Ma250W）
DC1,2,3 output	12–16.8V/10A	12–13V/10A	12–13V/10A	12–13V/15A
Type C output	5V2.4A、9V3A、12V3A、20V5A(PD100W)			
USB–1 output	5V3A、9V2A			15V3A\9V2A\12V1.5A
Wireless output	No			15W
Solar input	10–48V/6A(max 250W)			
Car charger output	No		12–13V/15A	
Cycle	800Times			
Charge temperature	0–45° C			
Discharge temperature	–20–55° C			
Weight	1.9kg	2.9kg	6kg	12.4kg
Size	182x102x144mm	225x120x215mm	258x212x249mm	338x245x247mm

Application






ENTERPRISE HONOR

Honor is the best witness to the strength of Huison, also our never-ending power to move forward

Lithium Battery Certification



ISO Quality Management System

Patent certificate



National High-tech Enterprise Key Laboratory of Lithium ion power battery structure design and optimization of Zaozhuang City
National Science and Technology SMEs Member of Zaozhuang lithium battery industry alliance
UL1973,CB&IEC62133,CE, ROHS, REACH,MSDS, UN38.3 etc

Our customers are located in dozens of countries around the world

Shandong Huison Electronics Technology CO.,Ltd is committed to providing global customers with high-quality technology products and services.We have after-sales and technical service agencies in Europe, North America and Australia to provide solutions at the first time.

